Upgrading the Capacity and Reliability of the BPA Transmission System

Report to the Infrastructure Technical Review Committee

June 20, 2006

TABLE OF CONTENTS

2006 ITRC REPORT **3**

1.1 BACKGROUND **3**

1.2 PROJECTS REVIEWED IN 2006 3
1.3 RATE AND BUDGETARY IMPACTS 3
1.4 STATUS OF PROJECTS PREVIOUSLY REVIEWED 4
1.5 GLOSSARY OF ACRONYMS AND TERMS 5

APPENDIX A: 2006 ITRC MEETING ATTENDEES **7**

APPENDIX B: PROJECT STATUS AND UPDATES **8**

PROJECT STATUS AS OF MAY 23, 2006 8

APPENDIX C: PROJECT SUMMARY **9**

LIBBY (FEC) – TROY REBUILD PROJECT 9
Background *9*
Project Description *10*
Limiting Outages Addressed *10*
Benefit – Load Service *10*
Alternatives Considered *11*
Business Case *12*
Risk *13*
Analysis *14*
One-line Diagram: 2006 Normal Winter Base Case *15*

APPENDIX D: ECONOMIC ANALYSIS **16**

LIBBY (FEC) – TROY 16

APPENDIX E: AGENCY RISK ASSESSMENT **17**

LIBBY (FEC) – TROY 17

2006 ITRC Report

1.1 Background

The ITRC was formed in 2001 at the behest of some BPA customers to support BPA's efforts to secure funding for BPA's infrastructure proposals. The ITRC evaluates and works to prioritize BPA's proposed improvement projects in a manner that will provide the most cost-effective reliable service for the region's consumers. Guidelines for the reviews are defined in the "Agreement for Annual Review of Major BPA Transmission Investments" dated July 18, 2001 and with an update added on January 15, 2002. The committee draws on individuals who are also members of the Northwest Power Pool (NWPP) Transmission Planning Committee (TPC) and the Operating Committee (OC). The committee's review is one of several reviews for BPA's proposals. BPA participates in the committee's work by submitting a report on proposed transmission investments and by facilitating the committee's review of those proposals. BPA does not vote on the committee's findings and does not finance the work of the ITRC.

This review is the fifth presented to the ITRC and covers one project. Review of additional projects will be conducted in subsequent years.

1.2 <u>Projects Reviewed in 2006</u>

A detailed description of the project submitted for review (summarized below) is given in Appendix C together with the economic analysis in Appendix D.

Libby (FEC) – Troy Rebuild Project: The existing 17-mile H-frame wood pole Libby (FEC) – Troy 115 kV section of the Libby-Bonners Ferry 115 kV line in northwestern Montana is deteriorating to the point where it needs a major rebuild to continue serving customer loads safely and reliably. The line is an integral part of the larger 115 kV loop that provides electrical service to Libby, Bonners Ferry, and Sandpoint, as well as a number of smaller communities. Because of the environmentally sensitive area in which the line resides, local stakeholders would not favor construction in this area more than once. Therefore, the solution involves addressing long-term needs in the area, as well as the imminent safety and reliability needs. A single circuit 115 kV rebuild meets load service requirements for the next 40 plus years in addition to addressing the current safety and reliability issues.

Capital Cost: $18.5 M (with overheads)
Proposed Energization Date: Fall 2008

Drivers for 2006 Recommended Project

- Load Service
- Reliability
- Safety

1.3 <u>Rate and Budgetary Impacts</u>

There continues to be a compelling need to reinforce portions of the Northwest Bulk Transmission grid and secure funding to meet that need.

- Figure 1 on page 6 illustrates the historical and projected transmission capital requirements forecasted by BPA over a ten-year planning horizon. The capital outlay from 2001 and beyond, including the infrastructure proposals is well above BPA's remaining borrowing authority. Therefore, BPA will pursue other alternatives in order to ensure a sustainable capital program.
- BPA will continue to pursue and evaluate third-party financing opportunities for major new transmission projects.
- Preliminary analysis for individual projects could show that in some cases the cost would be fully recovered by increased usage and may put downward pressure on rates. Other projects that are driven by reliability needs may put upward pressure on rates. However, this can be offset depending on whether there are avoided costs or benefits not related to sales. This report is not intended to be a rate projection.
- Where the generation project developers are funding Network upgrades, BPA needs to secure firm transmission service contracts of sufficient duration and with appropriate credit provisions before proceeding with construction in order to prevent stranded costs.
- Additional reinforcements by BPA and others are needed to maximize reliability and transfer capability from the proposals. Other Northwest utilities have planned and in some cases committed to transmission additions, and maximum benefits will be achieved through coordinated development.

Future reviews will be conducted to evaluate and prioritize BPA proposed major transmission projects in a manner that will provide the most cost-effective, reliable service for the region's consumers.

1.4 Status of Projects Previously Reviewed

In 2004, BPA provided a status report on projects that were previously reviewed by the ITRC. There were no significant changes in circumstances that required any of these projects be returned for a full review. Some of the projects previously reviewed are under construction or have been energized. In addition to the projects reported as energized in the 2004 ITRC report (Projects G1, G6, G7, G10, and parts of G9), the following previously reviewed projects have since been energized or are almost completely energized:

- Project G2 (North of Hanford): The Schultz-Wautoma 500-kV line and Wautoma 500-kV Substation were energized December 2005.

- Project G9 (Bell-Coulee 500-kV Line): The Bell-Coulee 500-kV Line was energized on December 1, 2004. In addition to the Bell-Coulee 500-kV Line, new series capacitors at Bell and Dworshak Substations are now in service. The complete list of West of Hatwai area projects also includes a number of Avista projects which include the following:

1. Benewah-Shawnee 230-kV Line
2. Dry Creek 230-kV Substation
3. Beacon-Rathdrum Double Circuit 230-kV Line
4. Hatwai-Lolo 230-kV Line Upgrade
5. Hatwai-North Lewiston 230-kV Line Upgrade
6. Dry Creek-North Lewiston 230-kV Line Upgrade
7. Benewah 230-kV Shunt Capacitors (200 MVAR)
8. Dry Creek 230-kV Shunt Capacitors (200 MVAR)

Most of Avista's projects have been completed except for the Benewah-Shawnee 230-kV line, and the Benewah 230-kV Shunt Capacitor (200 MVAR) addition. These remaining Avista facilities are scheduled to be energized in the 2007-2008 time frame. All of the facilities listed above have been taken through the WECC Regional Planning Process. The West of Hatwai System Upgrade Project achieved Phase Three status and an accepted rating of 4277 MW east to west as part of the WECC Three Phase Rating Process.

The following project will be presented to the review committee in the future:

- South Seattle Transformer Addition: Studies are still being developed for the transformer location and its need date.

An update was provided on the following projects at the 2006 ITRC meeting:

- Olympic Peninsula Reinforcement: Energization date for this 14 mile, double circuit 230 kV reinforcement project is fall 2009.
- Lower Valley Area Reinforcement: Energization date for this joint project between BPA, PAC, and Lower Valley is fall 2009.

All other remaining projects still remain on hold or cancelled due to a lack of system need or generation projects being developed.

And updated list of projects can be found in Appendix B.

Note: BPA will no longer refer to future main grid reinforcement projects as G-designated projects.

1.5 Glossary of Acronyms and Terms

MW	A unit of power. One MW would serve approximately 700 homes
NWPP	Northwest Power Pool
WECC	Western Electricity Coordinating Council

Bulk Transmission – Transmission lines that serve as the backbone of the grid, typically operated at voltages of 230-kV and above.

Figure 1. TBL Capital Projects Historical & Future Trend

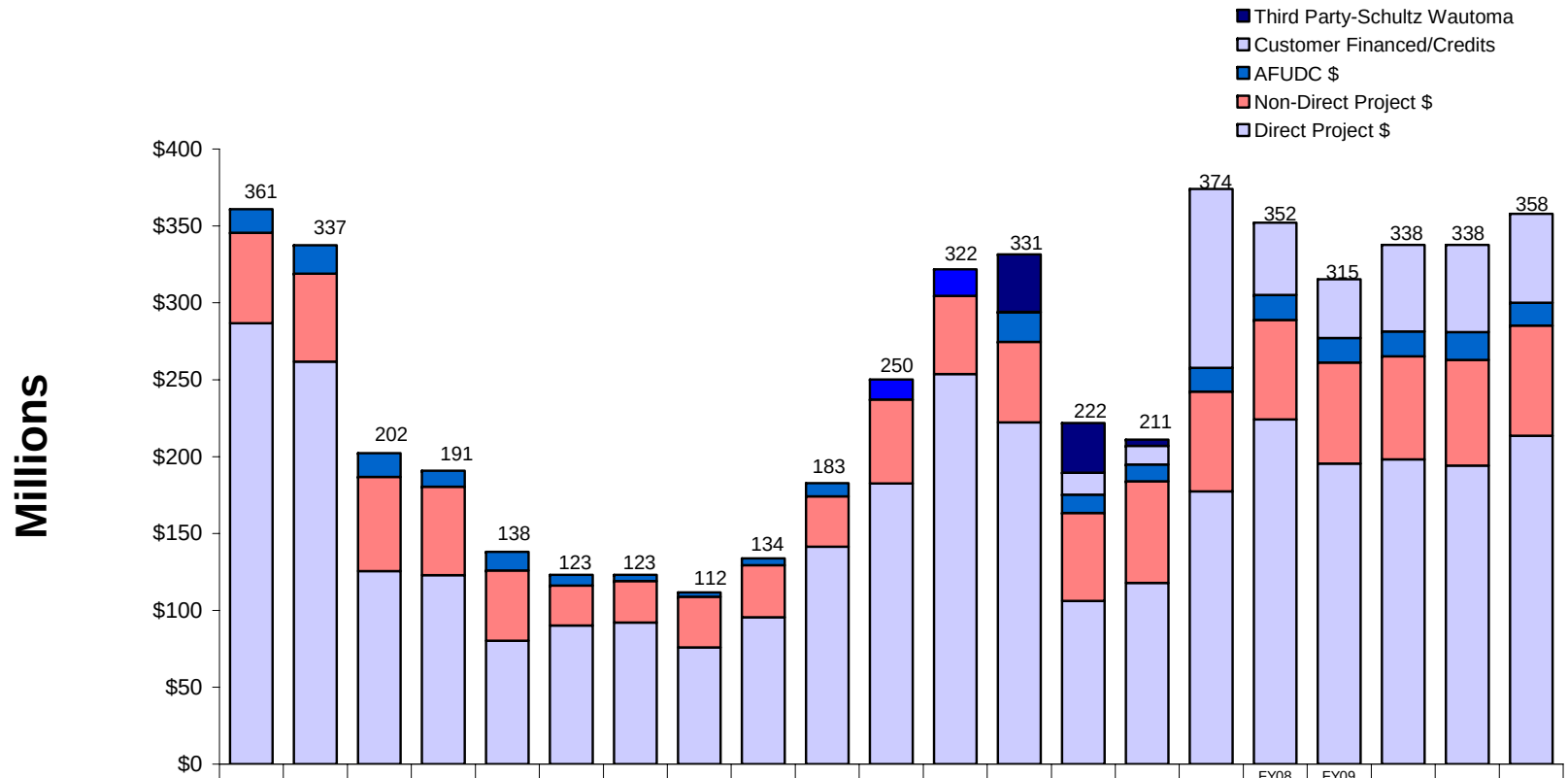

	FY92	FY93	FY94	FY95	FY96	FY97	FY98	FY99	FY00	FY01	FY02	FY03	FY04	FY05	FY06	FY07	FY08 PIR	FY09 PIR	FY10	FY11	FY12
Third Party-Schultz Wautoma													37.3	32.4	4.1	0.0	0.0	0.0	0.0	0.0	0.0
Customer Financed/Credits													0.2	14.2	12.2	116.3	47.0	38.2	56.1	56.7	57.9
AFUDC $	15.4	18.4	15.5	10.5	12.1	6.8	4.0	2.9	4.5	8.6	13.1	17.3	19.3	12.1	11.0	15.4	16.2	16.1	16.3	18.0	14.8
Non-Direct Project $	58.6	57.3	61.2	57.5	45.5	26.1	27.0	32.9	33.9	32.8	54.5	50.8	52.3	57.2	66.0	65.0	64.6	65.6	67.0	68.8	71.5
Direct Project $	286.8	261.7	125.6	122.9	80.4	90.1	92.0	75.9	95.5	141.3	182.5	253.7	222.3	106.1	117.8	177.3	224.3	195.5	198.2	194.1	213.6

Appendix A: 2006 ITRC Meeting Attendees

	Name	*Company*	*Phone #*	*Email*
1	Augustin, Philip	PGE-T	503-464-7783	philip.augustin@pgn.com
2	Dillon, Kenneth	PGE-T	503-464-7400	kenny.dillon@pgn.com
3	Eden, Jim	PGE-PS	503-464-7031	jim.eden@pgn.com
4	Fredrickson, Rebecca	BPA-T	360-418-2409	refredrickson@bpa.gov
5	Gnaedinger, Randy	AVA	509-495-2047	RandyGnaedinger@avistacorp.com
6	Kohne, Kyle	BPA-T	360-619-6066	krkohne@bpa.gov
7	Matthews, Chuck	BPA-T	360-619-6668	cematthews@bpa.gov
8	Miller, Jeff	PAC	503-813-5067	jeffrey.miller@pacificorp.com
9	Mittelstadt, Bill	BPA-T	360-619-6672	wmittelstadt@bpa.gov
10	Radcliff, Anthony	BPA-T	360-619-6049	apradcliff@bpa.gov
11	Reedy, Dana	NWPP	503-464-2806	dana@nwpp.org
12	Robinson, Kirk	BPA-T	360-619-6301	kmrobinson@bpa.gov
13	Rodrigues, Melvin	BPA-T	360-619-6676	mtrodrigues@bpa.gov
14	Schulz, Christina	BPA-T	360-619-6635	caschulz@bpa.gov

Appendix B: Project Status and Updates

Project Status as of May 23, 2006

Project	Energization	Notes	Preliminary Estimated Cost without Overheads ($M)	Presented to ITRC for Concurrence
Olympic Peninsula Reinforcement	Fall 2009	Construct 14 miles, 230-kV double circuit.	26.0	2002 and 2004
Lower Valley Area Reinforcement (Caribou)	Fall 2009	Joint project between BPA, PAC and Lower Valley.	13.2*	2004
Libby - Troy 115-kV Rebuild	Fall 2008	Preferred alternative is to rebuild the line at single circuit 115-kV	14.0	2006
South Seattle Transformer Addition	TBD	Location and Need Date To Be Determined		
Project	**Energization**	**Notes**	**Preliminary Estimated Cost without Overheads ($M)**	**Presented to ITRC for Information**
Southwest Oregon Coast Reinforcement	Fall 2007	Install +/- 50MVAR static Var compensator (SVC) at Rogue Substation	7.0	2006

Notes:
* The estimated cost includes the portion to be paid by BPA only.

Appendix C: Project Summary
Libby (FEC) – Troy Rebuild Project

Background

The northwestern Montana/northern Idaho 115 kV system is comprised of BPA and Avista – owned transmission lines. It includes a BPA-owned 117-mile line that extends west from the Libby Dam to Albeni Falls, and an Avista – owned line that extends west from Cabinet Gorge, tying to BPA's system between Sand Creek (BPA) and Sandpoint (AVA) substations. Loads are primarily served from Libby and Cabinet Gorge and therefore power generally flows from east to west when all lines are in service.

This system is winter – peaking. During winter load conditions, the area is susceptible to load service problems due to issues with voltage stability and thermal overloads caused by outages at either end of the system. The worst single contingencies are loss of the Libby – Libby (FEC) 115 kV line section, loss of the Libby 230/115 kV transformer bank, or loss of the Albeni Falls – Priest 115 kV line section. For certain loading conditions, these outages cause Avista's Cabinet Gorge line to overload. Avista currently has a generation runback scheme at Noxon to mitigate overloads on this line. However, Avista considers this as only a temporary fix until long-term reinforcement in the area is implemented.

Summer conditions can lead to transfer capacity problems on BPA's 115 kV line caused by outages in the Flathead Valley area. These outages have the most impact on the Libby area when West of Hatwai flows are high. BPA currently has Libby RAS to mitigate these overloads (as well as stability problems in the area).

It is evident that reinforcement in this area is eventually needed to support load growth (currently 1%/year) and to ensure the system maintains adequate voltages and stays within thermal limits. However, the current need to rebuild the Libby (FEC, Flathead Electric Cooperative owns the substation) – Troy line section of the Libby – Bonners Ferry 115 kV line is not load growth driven.

The 17 mile Libby (FEC) – Troy 115 kV line section was built by Pacific Power in the 1950s. Flathead Electric Cooperative later gained ownership of the line, and then in 2003 BPA acquired ownership of the line from FEC.

Problem:

- The 17 mile Libby (FEC) – Troy 115 kV H-frame wood pole line section in northwestern Montana is deteriorating to the point where it needs a major rebuild to continue serving customer loads safely and reliably
    - Wooden poles: cannot safely withstand required structural loads
    - Cross arms: most are rotting and show splitting and damage
    - Conductor fittings: have begun to fail due to corrosion (one even led to a serious fire)
- This line section is an integral part of the larger 115 kV system that provides electrical service to Libby, Bonners Ferry, Sandpoint, and Albeni Falls as well as a number of smaller communities

- BPA needs to take action to ensure that it can continue to meet its statutory and contractual obligations to deliver power to where it is needed
- Short-term fixes are not sufficient as the line will still most likely not meet safety standards, regardless of the temporary fix
- This portion of line is in an area sensitive to the Kootenai – Salish Tribes, the State of Montana, and the United States Forest Service. These agencies would not favor construction in this sensitive area more than once

Project Description

BPA's preliminary preferred alternative is to rebuild the 17 mile Libby (FEC) – Troy line section as a single circuit 115 kV, using 0.951 in ACSRTW Toutle conductor (existing conductor is 266.8 ACSR Partridge). This option will meet load service requirements for the next 40 plus years, even with 2% load growth and extra heavy winter loading conditions assumed. The current estimated cost of this project is approximately $14.2 million (without overheads). Three proposed reroutes are being considered which could potentially slightly alter the project cost. However, BPA will not determine its route preference until after the environmental analysis is complete. This option will have fewer environmental impacts than the double circuit 230 kV option.

It is assumed that sufficient reactive support will be added when needed in order to maintain voltages that meet BPA's planning reliability criteria. Reactive needs are common to all rebuild options.

Limiting Outages Addressed

N-1: Transformer or transmission line

Benefit – Load Service

This project will increase the reliability of maintaining load service to the northwestern Montana/northern Idaho area. As previously mentioned, the Libby (FEC) – Troy 115 kV line section is an integral part of the larger 115 kV system that provides electrical service to Libby, Bonners Ferry, Sandpoint, and Albeni Falls, as well as a number of smaller communities.

Currently, the towns between Libby and Albeni Falls, including Bonners Ferry and Sandpoint, have redundant service (with two lines feeding the area). However, if the line segment between Libby (FEC) and Troy was lost because BPA did not rebuild the line, reliability of service would be reduced with only a single line serving these communities. If an outage were to occur anywhere between Troy and Albeni Falls or Libby and Libby (FEC) substations, service to these communities would be lost (assuming Avista's Cabinet Gorge – Bronx 115 kV line would overload for these outages). Rebuilding the line would assure redundant service to the towns in case of an outage or loss of service on one of the lines.

Alternatives Considered

1. 115 kV single circuit rebuild
2. 230 kV double circuit rebuild
3. Do Nothing
4. Non-transmission alternatives

Alternative #2 - Rebuild the line as double circuit 230 kV
In addition to meeting load service requirements well beyond the next 40 years, this alternative would increase transmission capacity in the area once the entire corridor from Libby to Bonners Ferry and ultimately to Bell was considered. Most of the Bonners Ferry to Sandpoint section of line has already been reconstructed as double circuit 230 kV and this would fit into the overall plan of having a dedicated 230 kV line from Libby – Bell. It would address uncertainties such as greater than expected load growth, a large load addition (the system presently has approximately 50 MW to spare), increased generation in the area (i.e., added units at Libby), or the need to reduce generation tripping at existing plants in western Montana. However, there are currently no firm plans for any of these uncertainties to actually occur. Because they are just speculative, the incremental cost increase of $13 million to build double circuit 230 kV is not justified. Sufficient review has already been completed to ensure that additional transmission options using other corridors are available in the unlikely event that new needs arise. This option would have greater environmental impacts than the single circuit 115 kV rebuild option.

Estimated cost: $27 million (without overheads)

Alternative #3 - Do Nothing
This option involves leaving the existing Libby (FEC) – Troy 115 kV line section in place and continuing to maintain it to the extent possible. However, this is not actually feasible because increasing maintenance issues and cost are reaching the point where removal or replacement is necessary.

Societal cost: The estimated present worth societal cost is about $24 million for an N-1 line outage. See Figure 2 below.

Figure 2: Societal Cost Analysis

	%	$/kWhr	Weighted
Residential	50.0%	$2.00	$1.00
Commercial	30.0%	$17.26	$5.18
Industrial	20.0%	$24.65	$4.93
Total			$11.11

Average Duration		183	minutes
Average Cost		$33.88	per kW
Inflation rate		3.00%	
Discount rate		9.00%	

Alternative		NPV	
Remove line in near term		$24,061	($000)
Worst case outage		$15,755	($000)

Alternative #4 – Non-transmission alternatives
The proposed project was presented to the Non-Wires Solutions Panel in December 2005. The consensus of the Panel was that this proposed project was not a candidate for a non-wire solution. There is no other way to provide a redundant electrical source to the City of Libby or any other customer along this transmission corridor than having a safe and reliable transmission tie between Libby (FEC) and Troy Substations. Bonneville requires redundant power sources to customers that meet certain criteria to ensure safe and reliable electric power.

Business Case
The following is a summary of the options considered above.

Options	Description	Capital Outlay	NPV	Benefits	O&M	B/C Ratio
Do Nothing	Do nothing	0	(24,061)			
Option 1	115 kV single circuit rebuild	14,236	(14,964)	0	0	N/A
Option 2	230 kV double circuit rebuild	27,055	(32,864)	0	2,307	N/A

Option 1 assumes that BPA would rebuild the 115kV line. The capital out-lay would be $14M. The NPV (Net Present Value) for option 1 is negative $14.9M. There was no assumption for additional O &M, since this is a replacement of like kind. If BPA does not rebuild the Libby-Troy line, the NPV is a negative $24M societal cost due to outages. Option 1 NPV is $9.1M better than the do nothing option NPV.

Option 2 assumes that BPA would rebuild the Libby (FEC) - Troy line section with a 230 kV double circuit line. The capital out-lay would be $27M. Since this option was not a replacement of like kind, there was an assumption for O & M included in the analysis. The O & M costs were inflated by 3% every year. The NPV for option 2 was a negative $32.9M. Option 2 is approximately $8.8M higher than the do nothing option.

Risk

Project Delayed

- By 1 year
  - Safety hazard exposure will increase and be extended
  - Load service reliability will be reduced
  - Availability of transmission will be reduced
  - Customer, constituent, and tribal dissatisfaction
  - Increased environmental impacts

- By 3 years
  - Existing line will most likely have to be de-energized, reducing load service reliability

Funding Reduced

- By 10%
  - BPA will build lower cost design, resulting in increased maintenance requirements and increased permitting issues
- By 30%
  - May not be achievable

Risks associated with doing the project

- May preclude future expansion of Libby – Bonners Ferry corridor
- Dissatisfaction with voltage and routing decisions

Risks associated with NOT doing the project

- Increased safety hazards
- Level of reliability significantly reduced
- Customer and constituent dissatisfaction with reduced availability and level of service

Analysis

BPA is considering the single circuit 115 kV rebuild option based on the following:

- System need
  - Reliability
  - Safety
  - Load service requirements
- Technical performance
- Lowest cost
- Fewest environmental impacts

Energization Date: Fall 2008

Estimated Cost: $14.2 million (without overheads)

One-line Diagram: 2006 Normal Winter Base Case

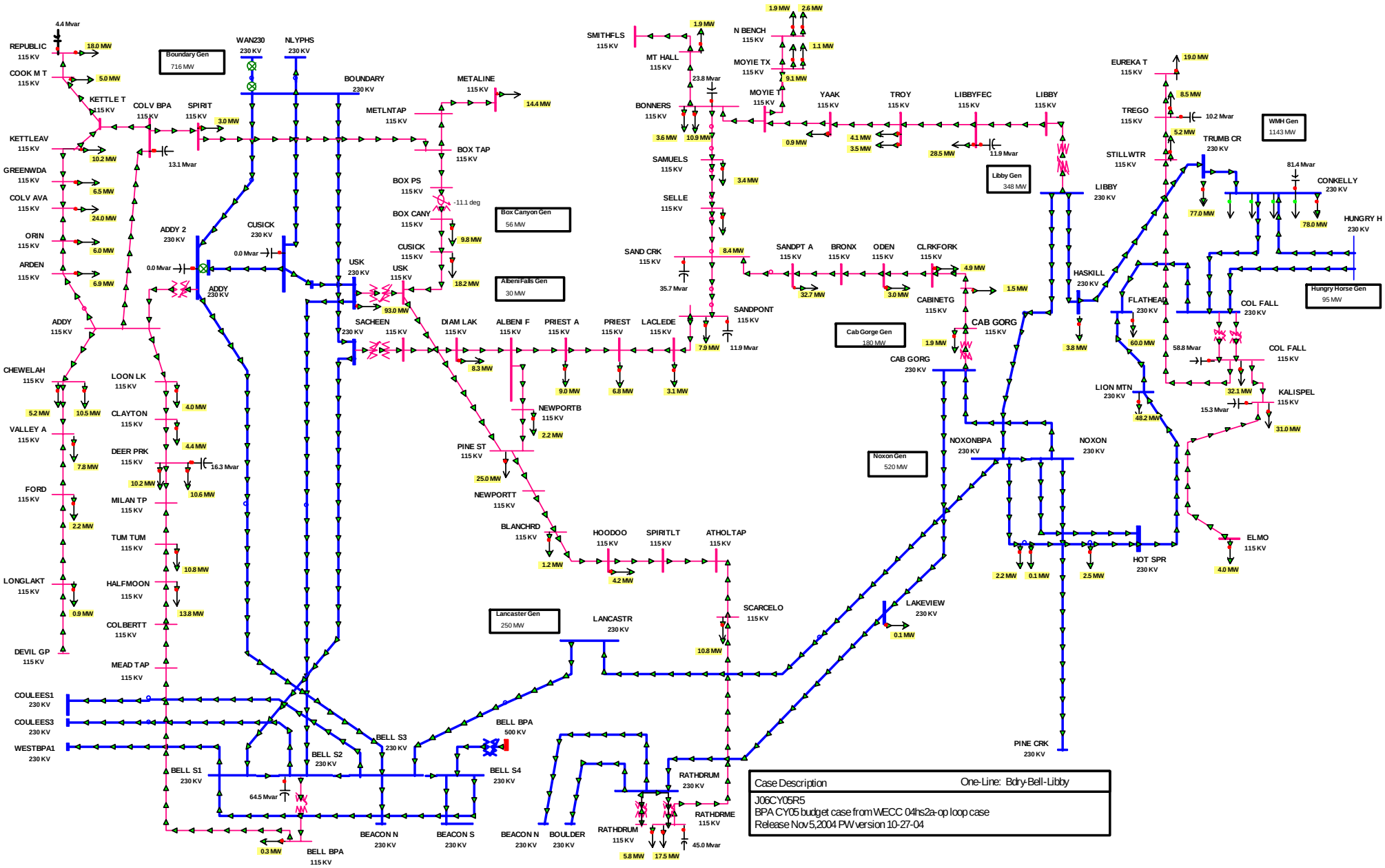

Appendix D: Economic Analysis

The analysis used for the Libby (FEC) – Troy Rebuild project was conducted using Excel spreadsheet calculations. The following indicators of economic performance were computed:

- Repayment time (years from in service date)
- Net Present Value

The basic economic assumptions used were as follows:

Discount Rate		9.00%
Inflation Rate		3.0%
BPA Financing Rate		5.5%
O&M Escalation		3.0%
O&M Actual		3.0%

The high discount rate of 9% favors projects with a faster payback period. The treasury-borrowing rate of 5.5% represents recent historical BPA borrowing.

Capital cost expenditures were distributed over the expected year of obligation over the construction period.

BPA transmission revenues were reckoned at the rate of $1.028 $/kW-mo (12.336 $/kW-year).

Typical operations and maintenance costs are used.

Libby (FEC) – Troy Economic Analysis

Summary: Libby_Troy_Summary_05-02-06.xls

Option 1 – 115 kV single circuit rebuild: Libby_Troy_Option_1__revised 5-02-06.xls

Option 2 – 230 kV double circuit rebuild: Libby Troy_Option_2_revised 5-02-06.xls

Do Nothing Option: Libby_Troy_Do_Nothing_revised_05-02-06.xls

Summary of Libby Troy Options

Options	Description	Capital Outlay	NPV	Benefits	Costs	B/C Ratio
Do Nothing	Do nothing	0	(24,061)			
Option 1	Reconductor single circuit line	14,236	(14,964)	0	0	N/A
Option 2	230 kV Double Circuit	27,055	(32,864)	0	2,307	N/A

ECONOMIC ANALYSIS	
With Residual Value	
PAR Number	
PAR NAME	Libby Troy: Option 1 115kV single circuit rebuild
Prepared by	Rebecca Fredrickson

FINANCIAL METRICS	
NPV	(14,964,244)
IRR	#DIV/0!

Residual Value	yes	Increase in Capacity:MW	0
Term months	240	KV Line	115
Start Rev Mo.	6	Is this a Replacement	N
Start Year	2007	# Breakers	0
Discount Rate	9.00%	# Shunts	-
EVA Rate	9.00%	Manual O & M Input	N
Capacitors and Switches	-	Capital Materials	0
Kv line miles	0	Other Capital	0

10-Jul-06

Income Statement	Initial	2007	2008	2009	2010	2011	2012	2013	2014	2015	2016	2017	2018	2019	2020	2021	2022	2023	2024	2025	2026	2027	Totals
Revenue																							
O & M Savings		0	0	0	0	0	0	0	0	0	0	0	0	0	0	0	0	0	0	0	0	0	0
Ancillary Sales		0	0	0	0	0	0	0	0	0	0	0	0	0	0	0	0	0	0	0	0	0	0
New Capacity KW Sales		0	0	0	0	0	0	0	0	0	0	0	0	0	0	0	0	0	0	0	0	0	0
Total Revenues	0	0	0	0	0	0	0	0	0	0	0	0	0	0	0	0	0	0	0	0	0	0	0
Cost of Goods Sold																							
O & M		0	0	0	0	0	0	0	0	0	0	0	0	0	0	0	0	0	0	0	0	0	0
Miscellaneous COGs (manual number)		0	0	0	0	0	0	0	0	0	0	0	0	0	0	0	0	0	0	0	0	0	0
Total Cost of Goods Sold		0	0	0	0	0	0	0	0	0	0	0	0	0	0	0	0	0	0	0	0	0	0
Gross Margin		0	0	0	0	0	0	0	0	0	0	0	0	0	0	0	0	0	0	0	0	0	0
Operating Expenses																							
Sales Overhead		0	0	0	0	0	0	0	0	0	0	0	0	0	0	0	0	0	0	0	0	0	0
Customer Service & Billing		0	0	0	0	0	0	0	0	0	0	0	0	0	0	0	0	0	0	0	0	0	0
Bad Debt		0	0	0	0	0	0	0	0	0	0	0	0	0	0	0	0	0	0	0	0	0	0
Direct & Indirect Labor		0	0	0	0	0	0	0	0	0	0	0	0	0	0	0	0	0	0	0	0	0	0
Electronic Maintenance Charges		0	0	0	0	0	0	0	0	0	0	0	0	0	0	0	0	0	0	0	0	0	0
Property Tax		0	0	0	0	0	0	0	0	0	0	0	0	0	0	0	0	0	0	0	0	0	0
Utilities & Insurance		0	0	0	0	0	0	0	0	0	0	0	0	0	0	0	0	0	0	0	0	0	0
Total Operating Expenses		0	0	0	0	0	0	0	0	0	0	0	0	0	0	0	0	0	0	0	0	0	0
EBITDA		0	0	0	0	0	0	0	0	0	0	0	0	0	0	0	0	0	0	0	0	0	0
Depreciation		80,970	462,685	462,685	462,685	462,685	462,685	462,685	462,685	462,685	462,685	462,685	462,685	462,685	462,685	462,685	462,685	462,685	462,685	462,685	462,685	192,785	9,064,769
Earnings Before Income Taxes		(80,970)	(462,685)	(462,685)	(462,685)	(462,685)	(462,685)	(462,685)	(462,685)	(462,685)	(462,685)	(462,685)	(462,685)	(462,685)	(462,685)	(462,685)	(462,685)	(462,685)	(462,685)	(462,685)	(462,685)	(192,785)	-9,064,769
Income Taxes		0	0	0	0	0	0	0	0	0	0	0	0	0	0	0	0	0	0	0	0	0	0
Net Income		(80,970)	(462,685)	(462,685)	(462,685)	(462,685)	(462,685)	(462,685)	(462,685)	(462,685)	(462,685)	(462,685)	(462,685)	(462,685)	(462,685)	(462,685)	(462,685)	(462,685)	(462,685)	(462,685)	(462,685)	(192,785)	-9,064,769

Cash Flow	Year 0	Year 1	Year 2	Year 3	Year 4	Year 5	Year 6	Year 7	Year 8	Year 9	Year 10	Year 11	Year 12	Year 13	Year 14	Year 15	Year 16	Year 17	Year 18	Year 19	Year 20	Year 21	Totals
Net Income	0	(80,970)	(462,685)	(462,685)	(462,685)	(462,685)	(462,685)	(462,685)	(462,685)	(462,685)	(462,685)	(462,685)	(462,685)	(462,685)	(462,685)	(462,685)	(462,685)	(462,685)	(462,685)	(462,685)	(462,685)	(192,785)	-9,064,769
Add: Depreciation		80,970	462,685	462,685	462,685	462,685	462,685	462,685	462,685	462,685	462,685	462,685	462,685	462,685	462,685	462,685	462,685	462,685	462,685	462,685	462,685	192,785	9,064,769
Deferred Taxes		0	0	0	0	0	0	0	0	0	0	0	0	0	0	0	0	0	0	0	0	0	0
Cash Flow from Operations	0	0	0	0	0	0	0	0	0	0	0	0	0	0	0	0	0	0	0	0	0	0	0
Investing Activities																							
Allocated Capital	5,552,219	0	12,955,179	0	0	0	0	0	0	0	0	0	0	0	0	0	0	0	0	0	0	0	18,507,398
New OSP	0	0	0	0	0	0	0	0	0	0	0	0	0	0	0	0	0	0	0	0	0	0	0
Other Investing Activities	0	0	0	0	0	0	0	0	0	0	0	0	0	0	0	0	0	0	0	0	0	9,114,894	9,114,894
Cash Used in Investing Activities	5,552,219	0	12,955,179	0	0	0	0	0	0	0	0	0	0	0	0	0	0	0	0	0	0	(9,114,894)	9,392,504
Net Free Cash Flows	(5,552,219)	0	(12,955,179)	0	0	0	0	0	0	0	0	0	0	0	0	0	0	0	0	0	0	9,114,894	-9,392,504
Cumulative Net Free Cash Flows	(5,552,219)	(5,552,219)	(18,507,398)	(18,507,398)	(18,507,398)	(18,507,398)	(18,507,398)	(18,507,398)	(18,507,398)	(18,507,398)	(18,507,398)	(18,507,398)	(18,507,398)	(18,507,398)	(18,507,398)	(18,507,398)	(18,507,398)	(18,507,398)	(18,507,398)	(18,507,398)	(18,507,398)	(9,392,504)	
PV of Net Free Cash Flows	(5,552,219)	0	(10,904,115)	0	0	0	0	0	0	0	0	0	0	0	0	0	0	0	0	0	0	1,492,090	-14,964,244

ECONOMIC ANALYSIS	
With Residual Value	
PAR Number	
PAR NAME	Libby Troy: Option 2 230kV double circuit
Prepared by	Rebecca Fredrickson

FINANCIAL METRICS	
NPV	(32,864,229)
IRR	#DIV/0!

Residual Value	yes	Increase in Capacity:MW	0
Term months	240	KV Line	230
Start Rev Mo.	6	Is this a Replacement	N
Start Year	2007	# Breakers	0
Discount Rate	9.00%	# Shunts	-
EVA Rate	9.00%	Manual O & M Input	N
Capacitors and Switches	-	Capital Materials	0
Kv line miles	0	Other Capital	0

10-Jul-06

	0	1	2	3	4	5	6	7	8	9	10	11	12	13	14	15	16	17	18	19	20	21
Income Statement	**Initial**	**2007**	**2008**	**2009**	**2010**	**2011**	**2012**	**2013**	**2014**	**2015**	**2016**	**2017**	**2018**	**2019**	**2020**	**2021**	**2022**	**2023**	**2024**	**2025**	**2026**	**2027**
Revenue																						
O & M Savings		0	0	0	0	0	0	0	0	0	0	0	0	0	0	0	0	0	0	0	0	0
Ancillary Sales		0	0	0	0	0	0	0	0	0	0	0	0	0	0	0	0	0	0	0	0	0
New Capacity KW Sales		0	0	0	0	0	0	0	0	0	0	0	0	0	0	0	0	0	0	0	0	0
Total Revenues	0	0	0	0	0	0	0	0	0	0	0	0	0	0	0	0	0	0	0	0	0	0
Cost of Goods Sold																						
O & M		0	0	478,866	493,232	508,029	523,270	538,968	555,137	571,791	588,945	606,613	624,812	643,556	662,863	682,748	703,231	724,328	746,058	768,439	791,493	815,237
Miscellaneous COGs (manual number)		0	0	0	0	0	0	0	0	0	0	0	0	0	0	0	0	0	0	0	0	0
Total Cost of Goods Sold		0	0	478,866	493,232	508,029	523,270	538,968	555,137	571,791	588,945	606,613	624,812	643,556	662,863	682,748	703,231	724,328	746,058	768,439	791,493	815,237
Gross Margin		0	0	-478,866	-493,232	-508,029	-523,270	-538,968	-555,137	-571,791	-588,945	-606,613	-624,812	-643,556	-662,863	-682,748	-703,231	-724,328	-746,058	-768,439	-791,493	-815,237
Operating Expenses																						
Sales Overhead		0	0	0	0	0	0	0	0	0	0	0	0	0	0	0	0	0	0	0	0	0
Customer Service & Billing		0	0	0	0	0	0	0	0	0	0	0	0	0	0	0	0	0	0	0	0	0
Bad Debt		0	0	0	0	0	0	0	0	0	0	0	0	0	0	0	0	0	0	0	0	0
Direct & Indirect Labor		0	0	0	0	0	0	0	0	0	0	0	0	0	0	0	0	0	0	0	0	0
Electronic Maintenance Charges		0	0	0	0	0	0	0	0	0	0	0	0	0	0	0	0	0	0	0	0	0
Property Tax		0	0	0	0	0	0	0	0	0	0	0	0	0	0	0	0	0	0	0	0	0
Utilities & Insurance		0	0	0	0	0	0	0	0	0	0	0	0	0	0	0	0	0	0	0	0	0
Total Operating Expenses		0	0	0	0	0	0	0	0	0	0	0	0	0	0	0	0	0	0	0	0	0
EBITDA		0	0	(478,866)	(493,232)	(508,029)	(523,270)	(538,968)	(555,137)	(571,791)	(588,945)	(606,613)	(624,812)	(643,556)	(662,863)	(682,748)	(703,231)	(724,328)	(746,058)	(768,439)	(791,493)	(815,237)
Depreciation		153,873	879,274	879,274	879,274	879,274	879,274	879,274	879,274	879,274	879,274	879,274	879,274	879,274	879,274	879,274	879,274	879,274	879,274	879,274	879,274	366,364
Earnings Before Income Taxes		(153,873)	(879,274)	(1,358,140)	(1,372,506)	(1,387,303)	(1,402,544)	(1,418,242)	(1,434,411)	(1,451,065)	(1,468,218)	(1,485,887)	(1,504,085)	(1,522,830)	(1,542,136)	(1,562,022)	(1,582,505)	(1,603,602)	(1,625,331)	(1,647,713)	(1,670,766)	(1,181,601)
Income Taxes		0	0	0	0	0	0	0	0	0	0	0	0	0	0	0	0	0	0	0	0	0
Net Income		(153,873)	(879,274)	(1,358,140)	(1,372,506)	(1,387,303)	(1,402,544)	(1,418,242)	(1,434,411)	(1,451,065)	(1,468,218)	(1,485,887)	(1,504,085)	(1,522,830)	(1,542,136)	(1,562,022)	(1,582,505)	(1,603,602)	(1,625,331)	(1,647,713)	(1,670,766)	(1,181,601)

Cash Flow	**Year 0**	**Year 1**	**Year 2**	**Year 3**	**Year 4**	**Year 5**	**Year 6**	**Year 7**	**Year 8**	**Year 9**	**Year 10**	**Year 11**	**Year 12**	**Year 13**	**Year 14**	**Year 15**	**Year 16**	**Year 17**	**Year 18**	**Year 19**	**Year 20**	**Year 21**	**Totals**
Net Income	0	(153,873)	(879,274)	(1,358,140)	(1,372,506)	(1,387,303)	(1,402,544)	(1,418,242)	(1,434,411)	(1,451,065)	(1,468,218)	(1,485,887)	(1,504,085)	(1,522,830)	(1,542,136)	(1,562,022)	(1,582,505)	(1,603,602)	(1,625,331)	(1,647,713)	(1,670,766)	(1,181,601)	-29,254,052
Add: Depreciation		153,873	879,274	879,274	879,274	879,274	879,274	879,274	879,274	879,274	879,274	879,274	879,274	879,274	879,274	879,274	879,274	879,274	879,274	879,274	879,274	366,364	17,226,438
Deferred Taxes		0	0	0	0	0	0	0	0	0	0	0	0	0	0	0	0	0	0	0	0	0	0
Cash Flow from Operations	0	0	0	(478,866)	(493,232)	(508,029)	(523,270)	(538,968)	(555,137)	(571,791)	(588,945)	(606,613)	(624,812)	(643,556)	(662,863)	(682,748)	(703,231)	(724,328)	(746,058)	(768,439)	(791,493)	(815,237)	-12,027,614
Investing Activities																							
Allocated Capital	10,551,285	0	24,619,664	0	0	0	0	0	0	0	0	0	0	0	0	0	0	0	0	0	0	0	35,170,949
New OSP	0	0	0	0	0	0	0	0	0	0	0	0	0	0	0	0	0	0	0	0	0	0	0
Other Investing Activities	0	0	0	0	0	0	0	0	0	0	0	0	0	0	0	0	0	0	0	0	0	17,321,692	17,321,692
Cash Used in Investing Activities	10,551,285	0	24,619,664	0	0	0	0	0	0	0	0	0	0	0	0	0	0	0	0	0	0	(17,321,692)	17,849,257
Net Free Cash Flows	(10,551,285)	0	(24,619,664)	(478,866)	(493,232)	(508,029)	(523,270)	(538,968)	(555,137)	(571,791)	(588,945)	(606,613)	(624,812)	(643,556)	(662,863)	(682,748)	(703,231)	(724,328)	(746,058)	(768,439)	(791,493)	16,506,455	-29,876,871
Cumulative Net Free Cash Flows	(10,551,285)	(10,551,285)	(35,170,949)	(35,649,815)	(36,143,047)	(36,651,076)	(37,174,346)	(37,713,313)	(38,268,450)	(38,840,241)	(39,429,186)	(40,035,799)	(40,660,611)	(41,304,167)	(41,967,029)	(42,649,778)	(43,353,008)	(44,077,336)	(44,823,394)	(45,591,833)	(46,383,326)	(29,876,871)	
PV of Net Free Cash Flows	(10,551,285)	0	(20,721,879)	(369,772)	(349,418)	(330,184)	(312,009)	(294,834)	(278,605)	(263,268)	(248,777)	(235,083)	(222,142)	(209,914)	(198,359)	(187,440)	(177,123)	(167,373)	(158,160)	(149,454)	(141,227)	2,702,075	-32,864,229

ECONOMIC ANALYSIS	
No Residual Value	
PAR Number	
PAR NAME	Libby Troy: Do Nothing
Prepared by	Rebecca Fredrickson

FINANCIAL METRICS	
NPV	(24,061,044)
IRR	#DIV/0!

Residual Value	No	Increase in Capacity:MW	0
Term months	240	KV Line	115
Start Rev Mo.	6	Is this a Replacement	N
Start Year	2007	# Breakers	0
Discount Rate	9.00%	# Shunts	-
EVA Rate	9.00%	Manual O & M Input	N
Capacitors and Switches	-	Capital Materials	0
Kv line miles	0	Other Capital	0

10-Jul-06

Income Statement	Initial	2007	2008	2009	2010	2011	2012	2013	2014	2015	2016	2017	2018	2019	2020	2021	2022	2023	2024	2025	2026	2027	Totals
Revenue																							
O & M Savings		0	0	0	0	0	0	0	0	0	0	0	0	0	0	0	0	0	0	0	0	0	0
Ancillary Sales		0	0	0	0	0	0	0	0	0	0	0	0	0	0	0	0	0	0	0	0	0	0
Societal Benefits	-9,422,007	-1,262,942	-1,300,830	-1,339,855	-1,380,050	-1,421,452	-1,464,095	-1,508,018	-1,553,259	-1,599,857	-1,647,852	-1,697,288	-1,748,206	-1,800,653	-1,854,672	-1,910,312	-1,967,622	-2,026,650	-2,087,450	-2,150,073	-2,214,576	-2,281,013	-36,216,726
Total Revenues	-9,422,007	-1,262,942	-1,300,830	-1,339,855	-1,380,050	-1,421,452	-1,464,095	-1,508,018	-1,553,259	-1,599,857	-1,647,852	-1,697,288	-1,748,206	-1,800,653	-1,854,672	-1,910,312	-1,967,622	-2,026,650	-2,087,450	-2,150,073	-2,214,576	-2,281,013	-36,216,726
Cost of Goods Sold																							
O & M		0	0	0	0	0	0	0	0	0	0	0	0	0	0	0	0	0	0	0	0	0	0
Miscellaneous COGs (manual number)		0	0	0	0	0	0	0	0	0	0	0	0	0	0	0	0	0	0	0	0	0	0
Total Cost of Goods Sold		0	0	0	0	0	0	0	0	0	0	0	0	0	0	0	0	0	0	0	0	0	0
Gross Margin		-1,262,942	-1,300,830	-1,339,855	-1,380,050	-1,421,452	-1,464,095	-1,508,018	-1,553,259	-1,599,857	-1,647,852	-1,697,288	-1,748,206	-1,800,653	-1,854,672	-1,910,312	-1,967,622	-2,026,650	-2,087,450	-2,150,073	-2,214,576	-2,281,013	-36,216,726
Operating Expenses																							
Sales Overhead		0	0	0	0	0	0	0	0	0	0	0	0	0	0	0	0	0	0	0	0	0	0
Customer Service & Billing		0	0	0	0	0	0	0	0	0	0	0	0	0	0	0	0	0	0	0	0	0	0
Bad Debt		0	0	0	0	0	0	0	0	0	0	0	0	0	0	0	0	0	0	0	0	0	0
Direct & Indirect Labor		0	0	0	0	0	0	0	0	0	0	0	0	0	0	0	0	0	0	0	0	0	0
Electronic Maintenance Charges		0	0	0	0	0	0	0	0	0	0	0	0	0	0	0	0	0	0	0	0	0	0
Property Tax		0	0	0	0	0	0	0	0	0	0	0	0	0	0	0	0	0	0	0	0	0	0
Utilities & Insurance		0	0	0	0	0	0	0	0	0	0	0	0	0	0	0	0	0	0	0	0	0	0
Total Operating Expenses		0	0	0	0	0	0	0	0	0	0	0	0	0	0	0	0	0	0	0	0	0	0
EBITDA		(1,262,942)	(1,300,830)	(1,339,855)	(1,380,050)	(1,421,452)	(1,464,095)	(1,508,018)	(1,553,259)	(1,599,857)	(1,647,852)	(1,697,288)	(1,748,206)	(1,800,653)	(1,854,672)	(1,910,312)	(1,967,622)	(2,026,650)	(2,087,450)	(2,150,073)	(2,214,576)	(2,281,013)	-36,216,726
Depreciation		0	0	0	0	0	0	0	0	0	0	0	0	0	0	0	0	0	0	0	0	0	0
Earnings Before Income Taxes		(1,262,942)	(1,300,830)	(1,339,855)	(1,380,050)	(1,421,452)	(1,464,095)	(1,508,018)	(1,553,259)	(1,599,857)	(1,647,852)	(1,697,288)	(1,748,206)	(1,800,653)	(1,854,672)	(1,910,312)	(1,967,622)	(2,026,650)	(2,087,450)	(2,150,073)	(2,214,576)	(2,281,013)	-36,216,726
Income Taxes		0	0	0	0	0	0	0	0	0	0	0	0	0	0	0	0	0	0	0	0	0	0
Net Income		(1,262,942)	(1,300,830)	(1,339,855)	(1,380,050)	(1,421,452)	(1,464,095)	(1,508,018)	(1,553,259)	(1,599,857)	(1,647,852)	(1,697,288)	(1,748,206)	(1,800,653)	(1,854,672)	(1,910,312)	(1,967,622)	(2,026,650)	(2,087,450)	(2,150,073)	(2,214,576)	(2,281,013)	-36,216,726

Cash Flow	Year 0	Year 1	Year 2	Year 3	Year 4	Year 5	Year 6	Year 7	Year 8	Year 9	Year 10	Year 11	Year 12	Year 13	Year 14	Year 15	Year 16	Year 17	Year 18	Year 19	Year 20	Year 21	Totals
Net Income	-9,422,007	(1,262,942)	(1,300,830)	(1,339,855)	(1,380,050)	(1,421,452)	(1,464,095)	(1,508,018)	(1,553,259)	(1,599,857)	(1,647,852)	(1,697,288)	(1,748,206)	(1,800,653)	(1,854,672)	(1,910,312)	(1,967,622)	(2,026,650)	(2,087,450)	(2,150,073)	(2,214,576)	(2,281,013)	-36,216,726
Add: Depreciation		0	0	0	0	0	0	0	0	0	0	0	0	0	0	0	0	0	0	0	0	0	0
Deferred Taxes		0	0	0	0	0	0	0	0	0	0	0	0	0	0	0	0	0	0	0	0	0	0
Cash Flow from Operations	-9,422,007	(1,262,942)	(1,300,830)	(1,339,855)	(1,380,050)	(1,421,452)	(1,464,095)	(1,508,018)	(1,553,259)	(1,599,857)	(1,647,852)	(1,697,288)	(1,748,206)	(1,800,653)	(1,854,672)	(1,910,312)	(1,967,622)	(2,026,650)	(2,087,450)	(2,150,073)	(2,214,576)	(2,281,013)	-45,638,733
Investing Activities																							
Allocated Capital	0	0	0	0	0	0	0	0	0	0	0	0	0	0	0	0	0	0	0	0	0	0	0
New OSP	0	0	0	0	0	0	0	0	0	0	0	0	0	0	0	0	0	0	0	0	0	0	0
Other Investing Activities	0	0	0	0	0	0	0	0	0	0	0	0	0	0	0	0	0	0	0	0	0	0	0
Cash Used in Investing Activities	0	0	0	0	0	0	0	0	0	0	0	0	0	0	0	0	0	0	0	0	0	0	0
Net Free Cash Flows	(9,422,007)	(1,262,942)	(1,300,830)	(1,339,855)	(1,380,050)	(1,421,452)	(1,464,095)	(1,508,018)	(1,553,259)	(1,599,857)	(1,647,852)	(1,697,288)	(1,748,206)	(1,800,653)	(1,854,672)	(1,910,312)	(1,967,622)	(2,026,650)	(2,087,450)	(2,150,073)	(2,214,576)	(2,281,013)	-45,638,733
Cumulative Net Free Cash Flows	(9,422,007)	(10,684,949)	(11,985,778)	(13,325,633)	(14,705,683)	(16,127,135)	(17,591,231)	(19,099,249)	(20,652,508)	(22,252,364)	(23,900,217)	(25,597,504)	(27,345,711)	(29,146,364)	(31,001,036)	(32,911,348)	(34,878,970)	(36,905,621)	(38,993,071)	(41,143,144)	(43,357,720)	(45,638,733)	
PV of Net Free Cash Flows	(9,422,007)	(1,158,662)	(1,094,882)	(1,034,614)	(977,662)	(923,846)	(872,992)	(824,938)	(779,528)	(736,618)	(696,071)	(657,755)	(621,548)	(587,334)	(555,004)	(524,453)	(495,584)	(468,305)	(442,526)	(418,167)	(395,149)	(373,397)	-24,061,044

Appendix E: Agency Risk Assessment

Libby (FEC) – Troy

AbbreviatedRiskTemplate_LibbyFEC_Troy.doc

Capital Proposal

Parent Project:_____

Date:		Proj Mngr:	Kirk Robinson
Revision:		Proj Rep:	

Title: Libby (FEC) to Troy Rebuild

Proposed Start Dt:_____ Forecast Completion Dt:_____

_X_New project ___Continuation of previously approved project | Business Line Rank Order Priority of Project ____

If previously approved: On schedule?_ _(Y/N) On budget?_ _(Y/N) | For each "N", state % ±_____Orig. Budget ± ____Orig. Schedule

Select one: Program _____ Portfolio _____ Project __X_ | Capitalization Approved by Accounting: _____ (Y,N)

Category proposed: ____Financial __X__Reliability __X___Availability __X__Environment __X__Safety _____Legal

Project description:

Replace the aging 17 mile 115-kV line section from Libby (FEC) to Troy with a new 115 kV single-circuit line to BPA standards.

Justification:

The existing line is in disrepair and needs to be replaced.

Failure to replace and operate the line as is will pose serious safety, reliability, and environmental issues.

Cost Estimate	FY 01	FY02	FY03	FY04	FY05	FY06	FY07	FY08	FY09	FY10	TOTAL
Capital						2	8	4			
Expense											
Total											

Revenue/Benefit Estimate	FY 01	FY02	FY03	FY04	FY05	FY06	FY07	FY08	FY09	FY10
New Revenues										
Avoided Lost Revenues										
Measurable Expense Reductions										
Total										

Project NPV _____ Project Cost/Benefit Ratio _____ Normalized NPV _____

Which Agency and BL Targets does this project support, and how?

S-2 System Reliability/Stakeholder Perspective:

Reliability: This project is needed for reliable transmission. Without the rebuild, reliability will be reduced. Unplanned outage frequency and duration of the Libby (FEC) – Troy 115 kV line could become unacceptable and there will be increased risk of involuntary curtailments of firm load due to a disturbance initiated on the BPA system. Reliability performance will continue to decrease.

Availability: This project also affects availability of transmission. Without the rebuild, the amount of time that the line will available for service will decrease over time due to the increase in need for maintenance on the deteriorating line.

S4 Environmental Stewardship, Low Rates/Stakeholder Perspective:

The proposed voltage and route of the rebuild takes into account the presence of the Grizzly bear recovery zone near Quartz Creek and culturally sensitive areas near Kootenai Falls.

Selection of the single 115 kV circuit rebuild option considered the Sturgeon Bi-Op. Currently, there are no firm plans for additional resource development in the Libby area. Preliminary analysis indicates that additional transmission options using other corridors are available in the unlikely event that new needs arise.

S5 Low Rates/Stakeholder Perspective:

Single circuit 115 kV rebuild option will cost about $13 M less than the double circuit 230 kV rebuild option, resulting in lower rates.

S10 Regional Accountability/Stakeholder Perspective:

BPA's collaborative relationships with customers, constituents, and tribes work toward meeting targeted levels of trust and confidence from those groups. More reliable transmission will also increase probability of meeting targeted levels.

I5 Regional Accountability/Internal Operations Perspective:

Public meetings were held with customers, constituents, and tribes to increase stakeholder understanding of the project objectives.

I7 System Reliability, Low Rates, Environmental Stewardship, and Regional Accountability/Internal Operations Perspective:

Major decisions for this project comply with the agency decision framework and reflect consistent application of BPA criteria.

What are other qualitative benefits not mentioned above?
The rebuild does not preclude a future corridor through the Northern Idaho/Western Montana area.

What other alternatives were considered?
Do nothing.
Rebuild Libby (FEC) – Troy section of line to double circuit 230 kV.
(Both rebuild alternatives include a combination of three potential realignment alternatives).

What will happen if this project is delayed 1 year (assume delayed project start if new, completion if existing)?
Safety problem exposure will increase and be extended.
Load service reliability will be reduced.
Availability of transmission will be reduced.
Customer, constituent, and tribal satisfaction will decrease due to loss of reliable and available service and increase in safety hazards.
Increased possibility of environmental impacts due to continued maintenance.

Delayed 3 years (assume delayed project start if new, completion if existing)?
Existing line will most likely have to be de-energized, reducing load service reliability.
If the existing line is de-energized, increased flow from Libby to Noxon may cause West of Hatwai problems, load curtailments will be more likely under extra heavy winter conditions, and the requirement to reduce Noxon generation will be extended.

What will happen if funding for this project is reduced 10% (while keeping schedule unchanged)?
BPA will build a lower cost design, resulting in increased maintenance requirements and increased permitting issues.

Reduced 30% (while keeping schedule unchanged)?
This may not be achievable.

What are the performance metrics for this project?
Accidents avoided and safety hazards averted
Reliability of service
Availability of service
Customer, constituent, and tribal satisfaction

Risks

A. List the 3-5 most important risks that can affect project success or failure.

1. Most important risks associated with doing the project:
   a) May preclude future expansion of Libby – Bonners Ferry corridor
   b) Difficulty in obtaining all necessary ROW
   c) Difficulty in accessing the line due to terrain
   d) Dissatisfaction with voltage and routing decisions

2. Most important risks associated with NOT doing the project:
   a) Increased safety hazards
   b) Loss of reliability
   c) If the rebuild is not done now, BPA may not be able to gain future access for a rebuild
   d) Customer and constituent dissatisfaction with reduced availability and level of service

B. With each major risk listed above, quantify the worst case and best case outcomes associated with the major risks listed previously.

1. Most important risks associated with doing the project.

Risk "1-Chance-in-20 Worst Case" "Expected Case" "1-Chance-in-20 Best Case"

a) Worst Case: Additional resources are developed at Libby which will require additional transmission capacity
Best Case: No additional resources are developed at Libby, resulting in no need for additional transmission capacity

b) Worst Case: Re-routes used, increasing project cost and decreasing stakeholder satisfaction
Best Case: Re-routes used, increasing stakeholder satisfaction

c) Worst Case: Substantial increase in project cost for construction
Best Case: Substantial increase in project cost for construction

d) Worst Case: High visibility law suits against BPA
Best Case: Dissatisfied customers with no law suits, acceptance of routing decisions

2. Most important risks associated with NOT doing the project.

Risk "1-Chance-in-20 Worst Case" "Expected Case" "1-Chance-in-20 Best Case"

a) Worst Case: Serious accidents and environmental damage leading to loss of life and property
Best Case: Remove line with no rebuild and acceptance of reduced level of service

b) Worst Case: Increased load curtailment
Best Case: Remove line with no rebuild and acceptance of reduced level of service

c) Worst Case: Rebuild double circuit from Troy to Bonners Ferry for load service. If it is determined that a 230 kV corridor is needed in the area, also build a second 230 kV circuit from Libby to Noxon to Bell for transfer capability.
Best Case: Acceptance of reduced level of service, and no requirement for a 230 kV corridor in the area

d) Worst Case: High visibility law suits against BPA
Best Case: Acceptance of reduced availability and level of service

C. List and describe risk controls to minimize adverse outcomes of the project.

1. Existing mitigation controls:

Early public involvement to keep people informed of decisions

Preliminary studies performed to show that other corridor alternatives are available if and when the need arises for additional capacity out of the Libby area

Working with local, state and Federal agencies to develop consensus with regard to federal law compliance

2. Potential new mitigation controls:

Attach at least two Risk Maps for this project (to be developed in consultation with CRO)

1. Map associated with doing the project.

2. Map associated with NOT doing the project