Establish and Communicate Facility Ratings
FAC 009
Flow Chart

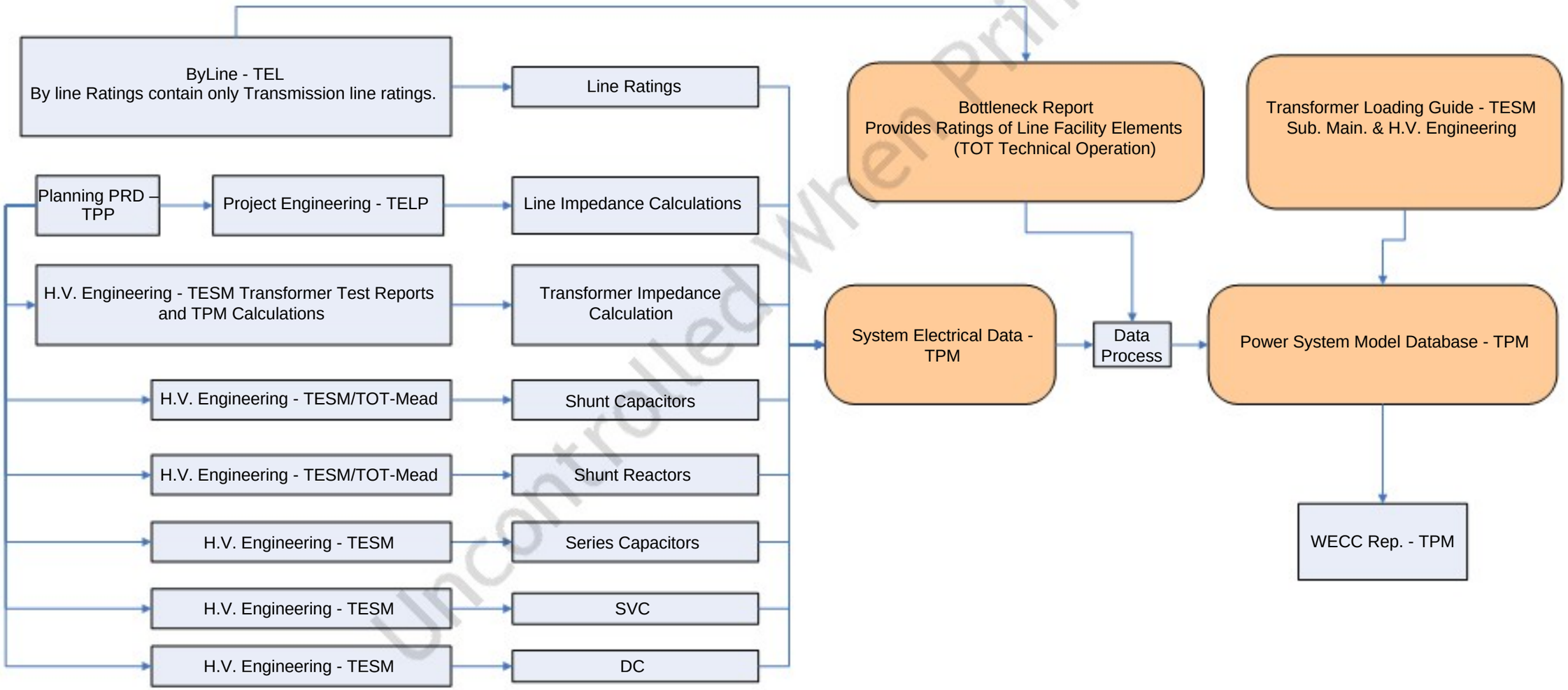

Uncontrolled When Printed

RDH/RLG - TPM 11/2/11